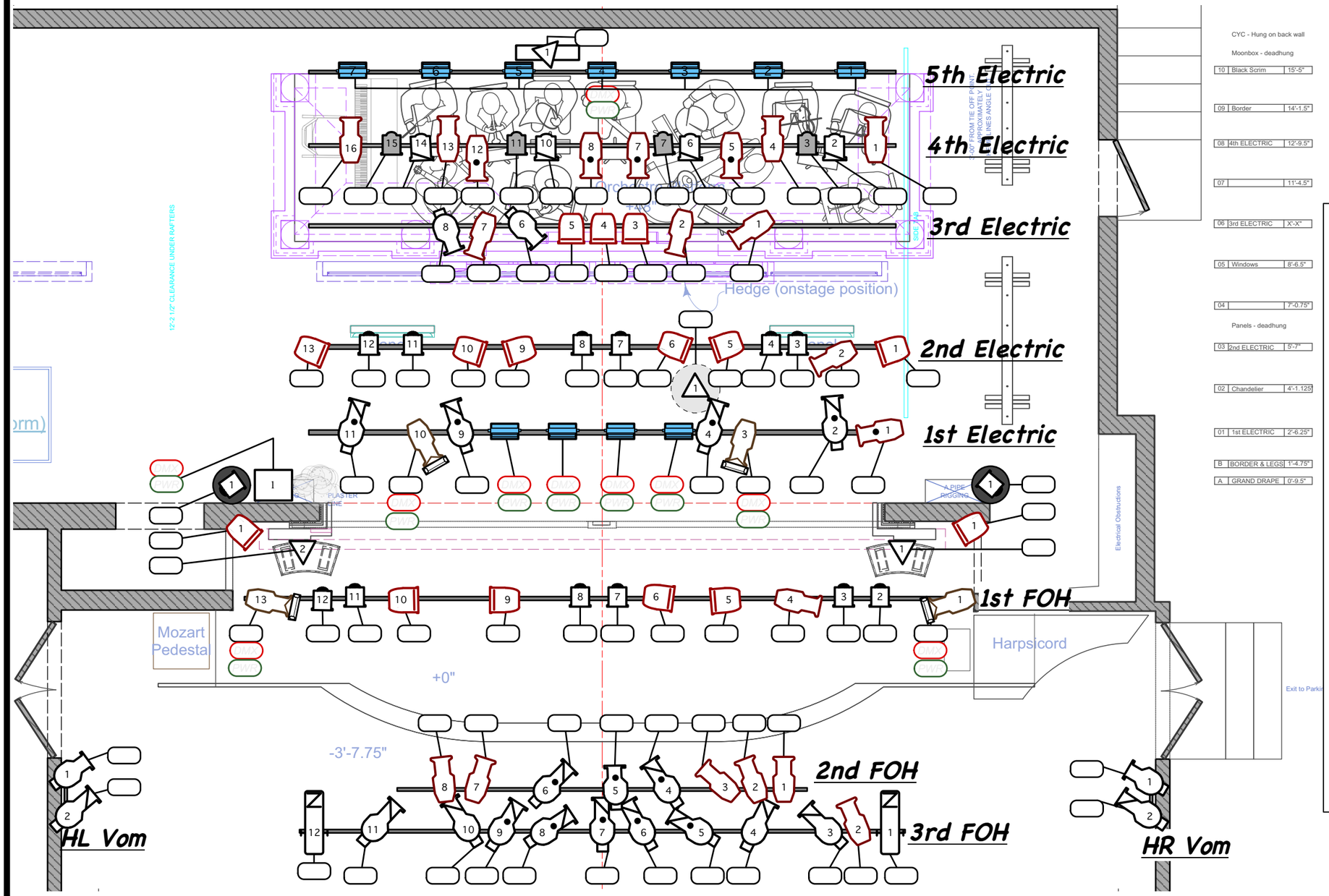

CYC - Hung on back wall

Moonbox - deadhung

10	Black Scrim	15'-5"
09	Border	14'-1.5"
08	4th ELECTRIC	12'-9.5"
07		11'-4.5"
06	3rd ELECTRIC	X'-X"
05	Windows	8'-6.5"
04		7'-0.75"

Panels - deadhung

03	2nd ELECTRIC	5'-7"
02	Chandelier	4'-1.125"
01	1st ELECTRIC	2'-6.25"
B	BORDER & LEGS	1'-4.75"
A	GRAND DRAPE	0'-9.5"

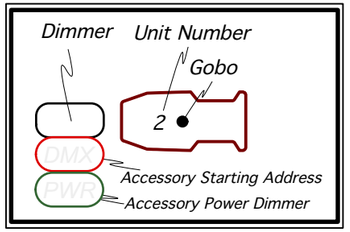

Notes:

- Units number from SL to SR, away from the plater line, and Top to Bottom.
- Any instrument with DMX will be circuted into edison outlets, not dimmers
- See designer regarding positioining of all practical / special hang units.
- Update Lightwright with all address assigments.
- Where possible install all color and templates prior to focus.
- All insturmentation be fully documented and troubleshot before focus.

Key

- Source 4 26° @ 575 Watts
- Source 4 36° @ 575 Watts
- Source 4 50° @ 750 Watts
- Altman 4.5x6
- Altman 6x9
- Altman 6" Fresnel
- L&E 6" Fresnel
- Strand 6" Fresnel
- PAR 64 MFL
- Chroma Q Color Blast
- TSSS LED PAR
- Chauvet Hazer
- ADJ FS600
- Apollo MXR Scroller
- Practical
- Cyc Strip

A Little Night Music	Monomoy Theatre		Dwg. No.
	Director: **Alan Rust**	Drafter: **Dylan G Bollinger**	**1**
Light Plot	Designer: **Dylan G Bollinger**	Date: **6/11/17**	
	Tech Director: **Miguel Lopez**	Scale: **1/4"=1'0"**	of 3